Eclipse 5.0

Highloadingcapacity hinges for flush doors

EN 1634
60

Newhigh-capacity concealedhinge, designedfor flushdoors withheavy sashes and for hotel doors. Thanks to the three micrometric and independent adjustments, Eclipse 5.0 makes it easy to adjust even on very heavy doors. The screw-fixed metal covers ensure a precise and long-lasting fit.



Up to 100 kg with two hinges, 130 kg with three hinges.

Three micrometric and separate adjustments. Simple management of heavy sash.

Perfect together with door closer or door stopper.

Flush steel covers.

Hinge dimensions

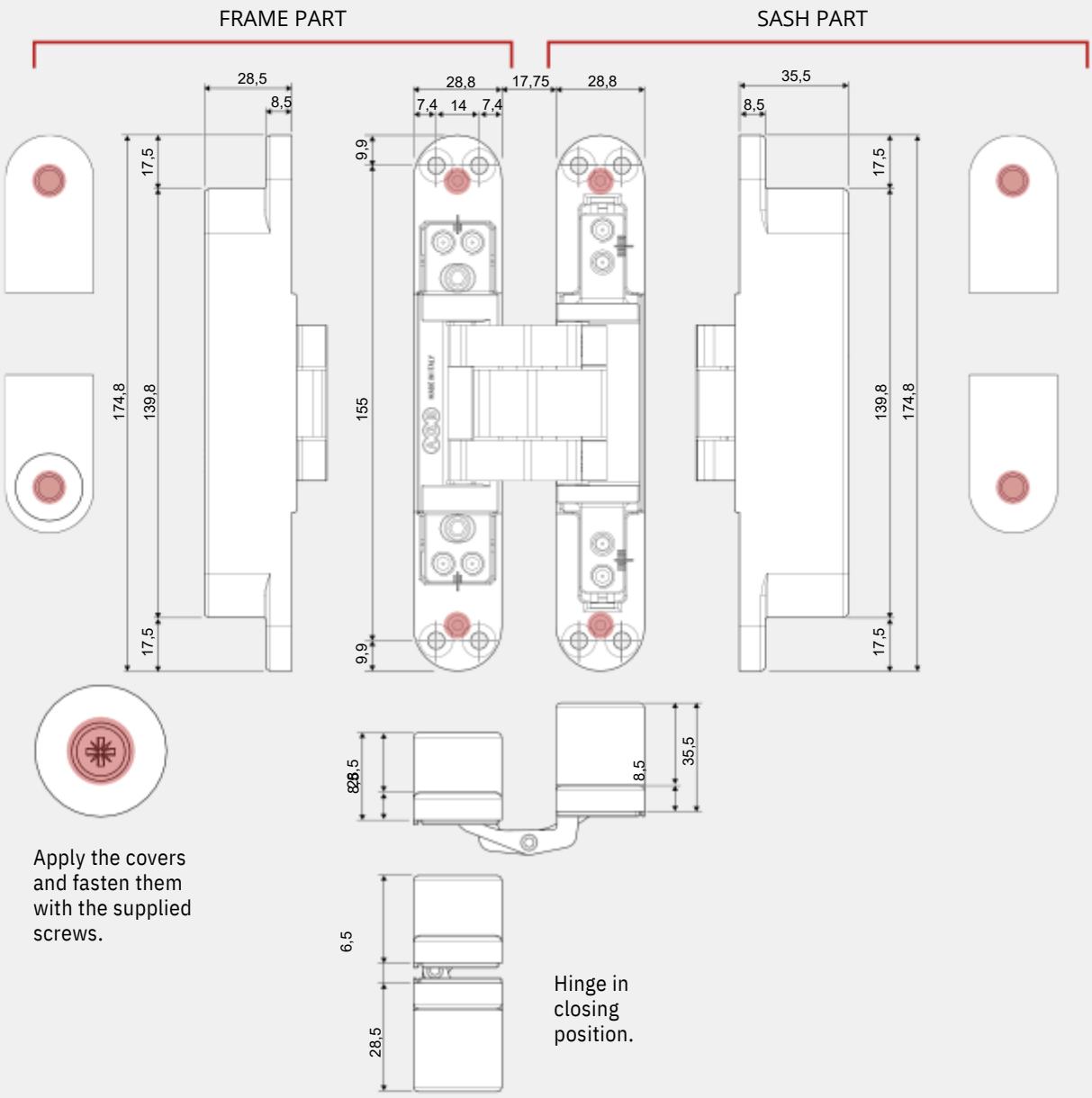

Apply the covers and fasten them with the supplied screws.

Hinge in closing position.

Hinge application

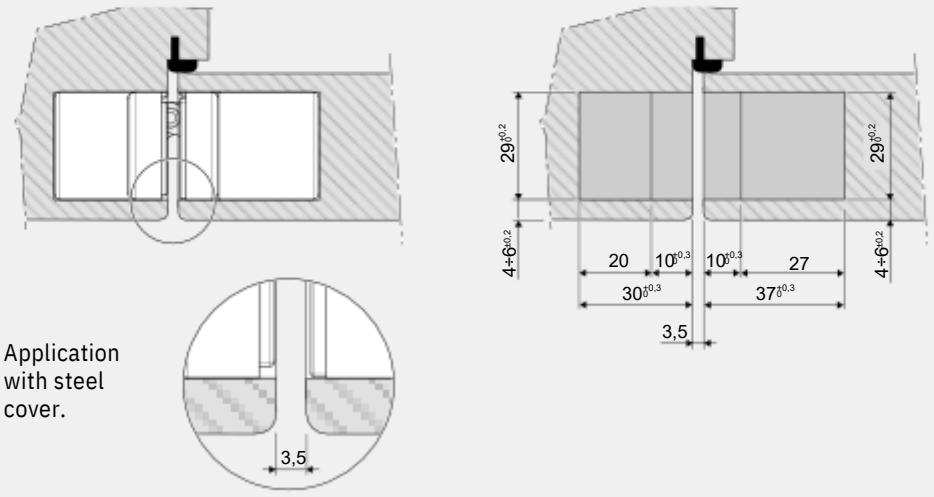

Application with steel cover.

Drilling diagram

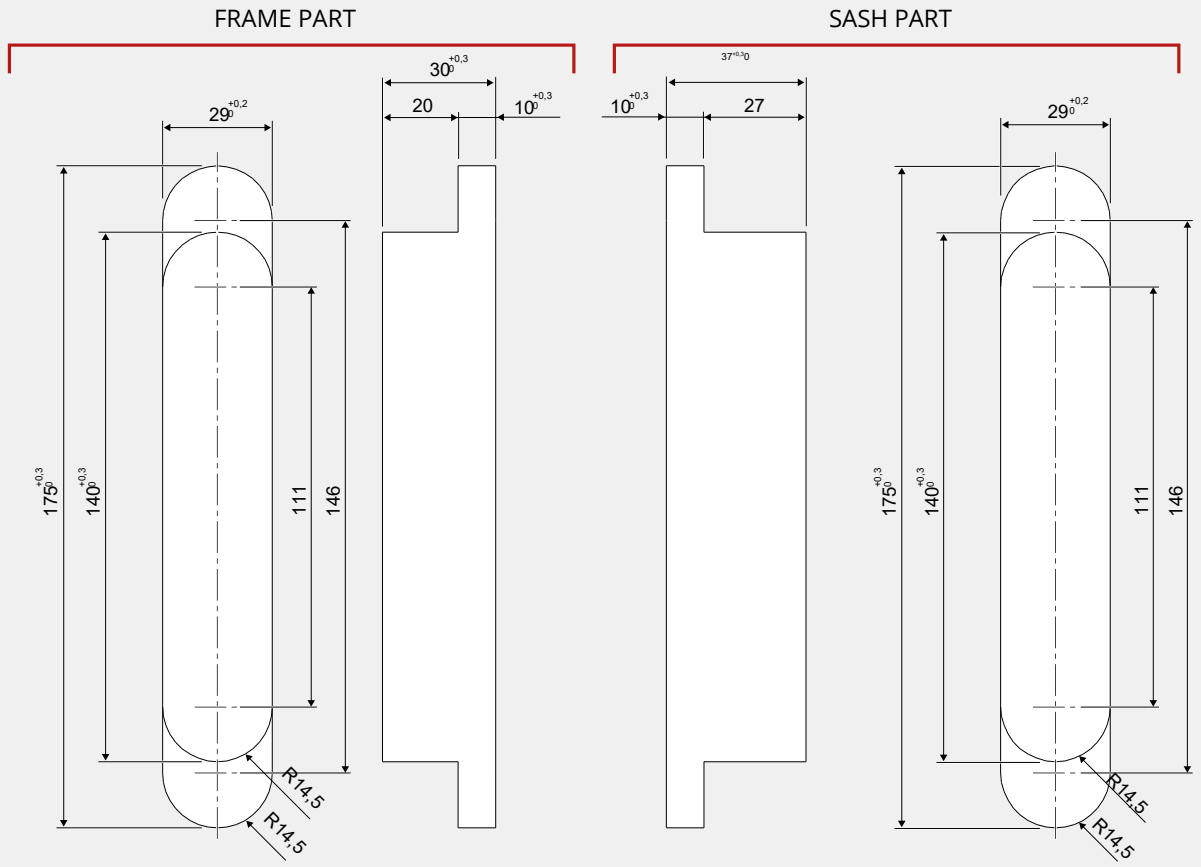

Hinge adjustments

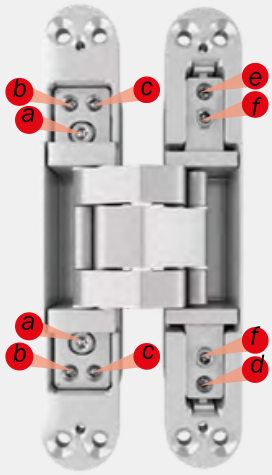

Please adjust the hinges one by one with a 4 mm Allen key; reach the desired adjustment on two screws alternatively and with little movements.

- ±1 mm pressure adjustment:
  PRESSURE INCREASE:
  loosen (a) screw (b) and unscrew (c) fasten (a)
  PRESSURE DECREASED:
  loosen (a) unscrew (b) and screw (c) fasten (a)
- ±3 mm vertical adjustment:
  loosen (d) raise (screw) or lower (unscrew) (e) fasten (d)
- ±3 mm horizontal adjustment:
  increase (unscrew) or decrease (screw) (f)

Finishes

WB - Bronze
SS - Satin Silver
BO - Black Opaque



	capacity	adjustment	opening	max. extension	covers applications		flush doors with rebate	flush doors without rebate	aluminium flush doors	fire and smoke resistant doors	EAD 020001-01-0405 EN 1935	UL LISTED
5.0	x3 = 130 kg x2 = 100 kg	3	180°	18 mm	●			●		60 minutes		

Hinges application fields

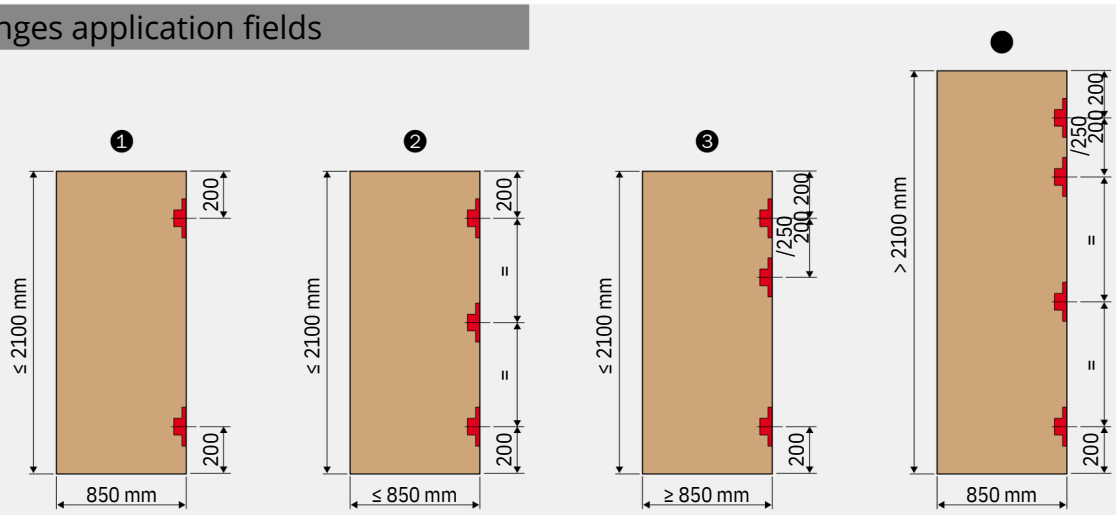

❶ *Two hinges capacity is 100 kg. In any case if the* door is higher than 1600 mm we suggest you a third hinge in the central position to reduce deformations.

❷ Three hinges capacity is 130 kg.

❸ Three hinges capacity is 130 kg. The third hinge paired at the top is recommended when using an overhead door closer (A) or if installed in high-traffic locations.

● The fourth hinge is recommended when using an overhead door closer (A) and door seals (B).

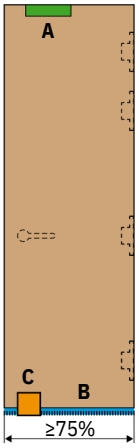

THIRD-PARTY ACCESSORIES

Overhead door closer (A)

Door seals (B)

Floor-mounted door stop (C)
Install it at a distance from the hinges of at least 75 % of the sash width in the direction of the lock.

Tests carried out with softwood and fixing of the hinge with screws as per technical data sheet*

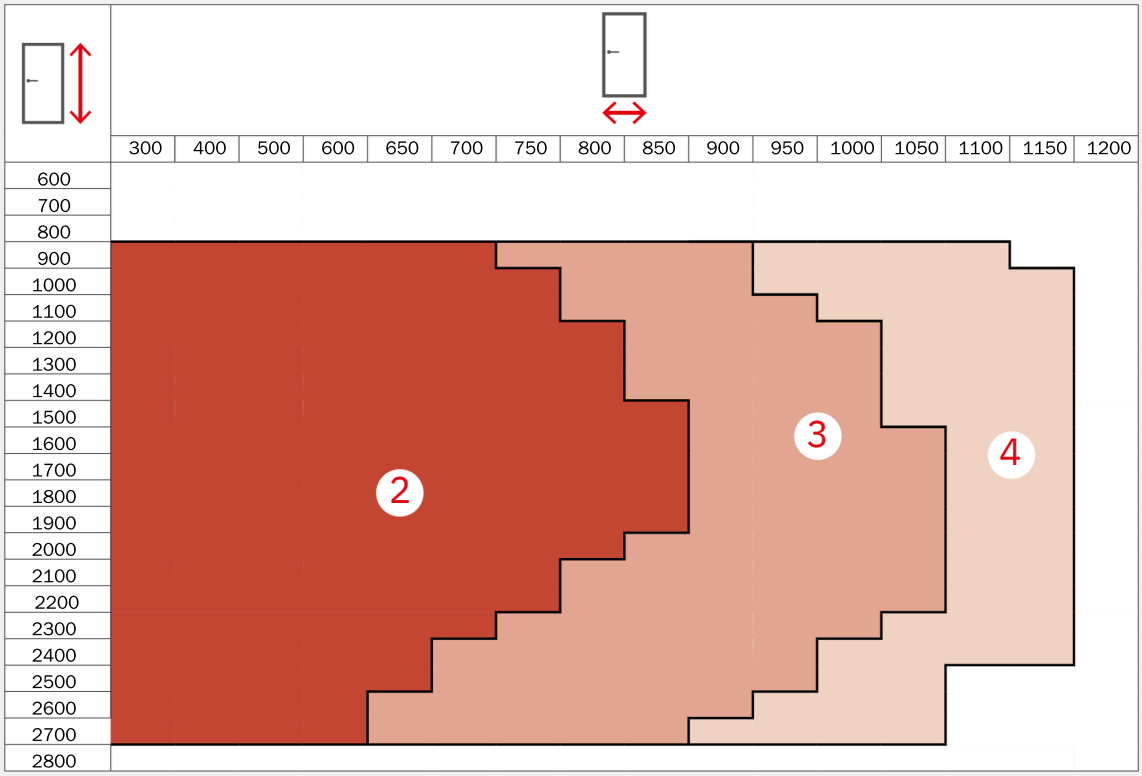

* The technical sheets are available at www.agb.it.
Doors with specific gravity of 60 kg/m^2.