Eclipse 3.2 HD

Highcapacityhingesforinternal flush doors

Concealed hingewith steellevers for heavy sashes.Suitable for applications with overhead door closer and door stop to the ground. Eclipse 3.2 HD has been designed for flush doors with or without rebate and for aluminium doors, thanks to the 4 mm fastening thickness of hinge. Eclipse 3.2 HD is provided with flush covers and it is available in a wide range of finishes.

EN 1634 60

C UL US LISTED 60



Steel levers, ideal for heavy doors.

Up to 60 kg with two hinges, 80 kg with three hinges.

For wood and aluminium doors.

Three adjustments completely independent.

Flush covers.

Hinge dimensions

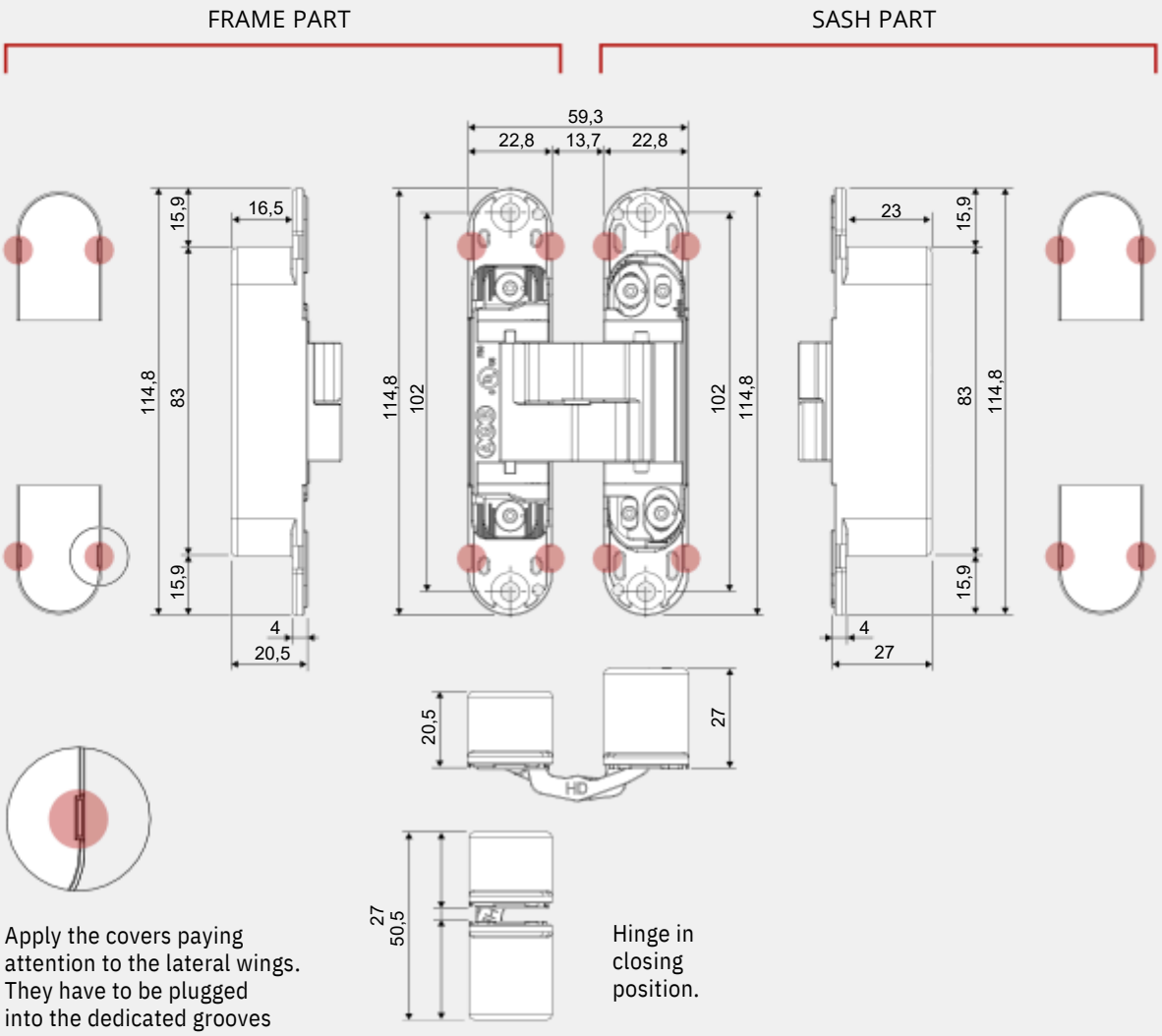

Apply the covers paying attention to the lateral wings. They have to be plugged into the dedicated grooves present in the hinge.

Hinge in closing position.

Hinge application

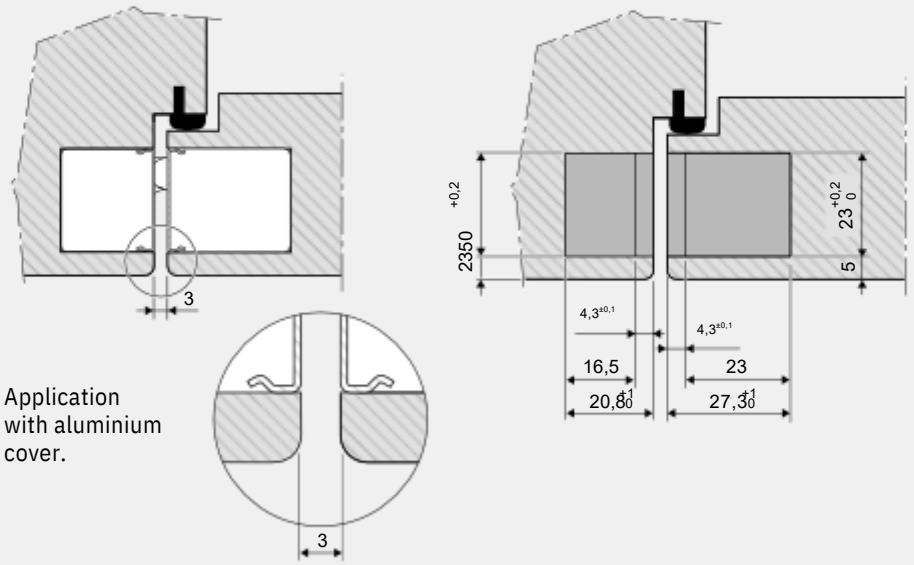

Application with aluminium cover.

Drilling diagram

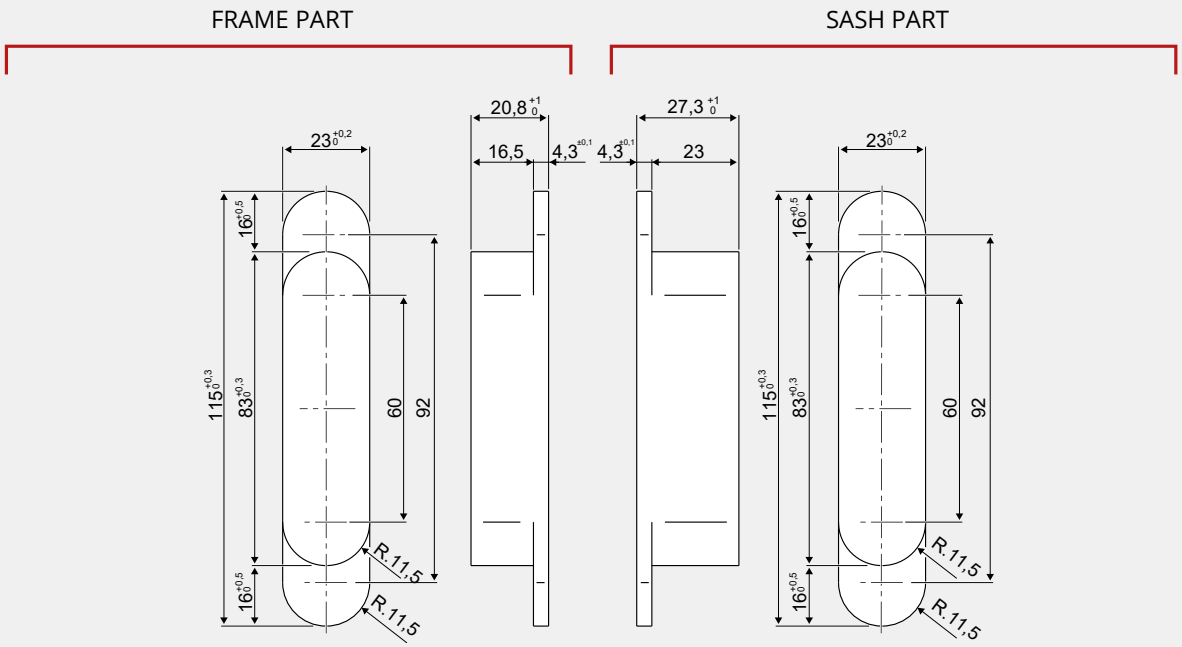

Hinge adjustments

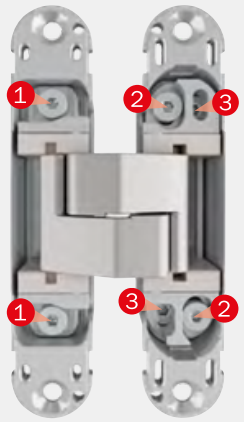

Please adjust the hinges with a 3 mm Allen key, as indicated here below:

- ±1 mm pressure adjustment:
  loosen the screws ❶ and move the hinge body.
  After this operation fasten the screws.
- ±2 mm vertical adjustment:
  loosen the screws ❷ using a screwdriver or a wedge which is suitable for Eclipse hinges, art. E30200.89.01.
  After this operation fasten the screws.
- ±1,5 mm horizontal adjustment:
  move the screws ❸.

Finishes

WB - Bronze
SS - Satin Silver
BO - Black Opaque



Eclipse	TECHNICAL INFORMATION					APPLICATIONS			CERTIFICATES		
	capacity	adjustment	opening	max. extension	covers applications	flush doors with rebate	flush doors without rebate	aluminium flush doors	fire and smoke resistant doors	EAD 020001-01-0405 EN 1935	UL LISTED
3.2 HD	x3 = 80 kg x2 = 60 kg	3	180°	14 mm	●	●	●	●	60 minutes		60 minutes

Hinges application fields

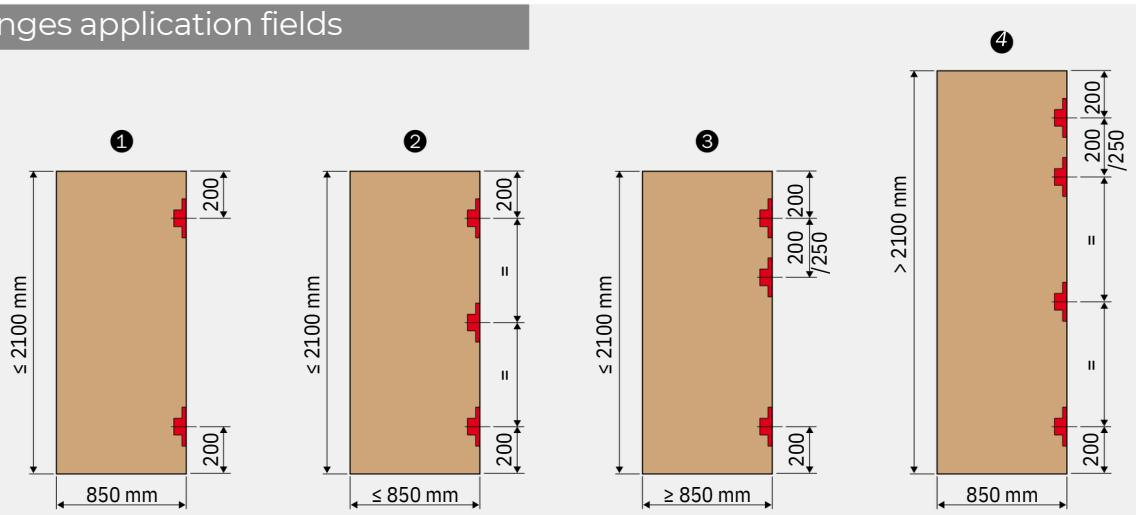

1. Two hinges capacity is 60 kg. In any case if the door is higher than 1600 mm we suggest you a third hinge in the central position to reduce deformations.

2. Three hinges capacity is 80 kg.

3. Three hinges capacity is 80 kg. The third hinge paired at the top is recommended when using an overhead door closer (A) or if installed in high-traffic locations.

4. The fourth hinge is recommended when using an overhead door closer (A) and door seals (B).

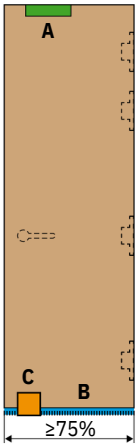

THIRD-PARTY ACCESSORIES

- Overhead door closer (A)
- Door seals (B)
- Floor-mounted door stop (C)
  Install it at a distance from the hinges of at least 75 % of the sash width in the direction of the lock.

Tests carried out with softwood and fixing of the hinge with screws as per technical data sheet*

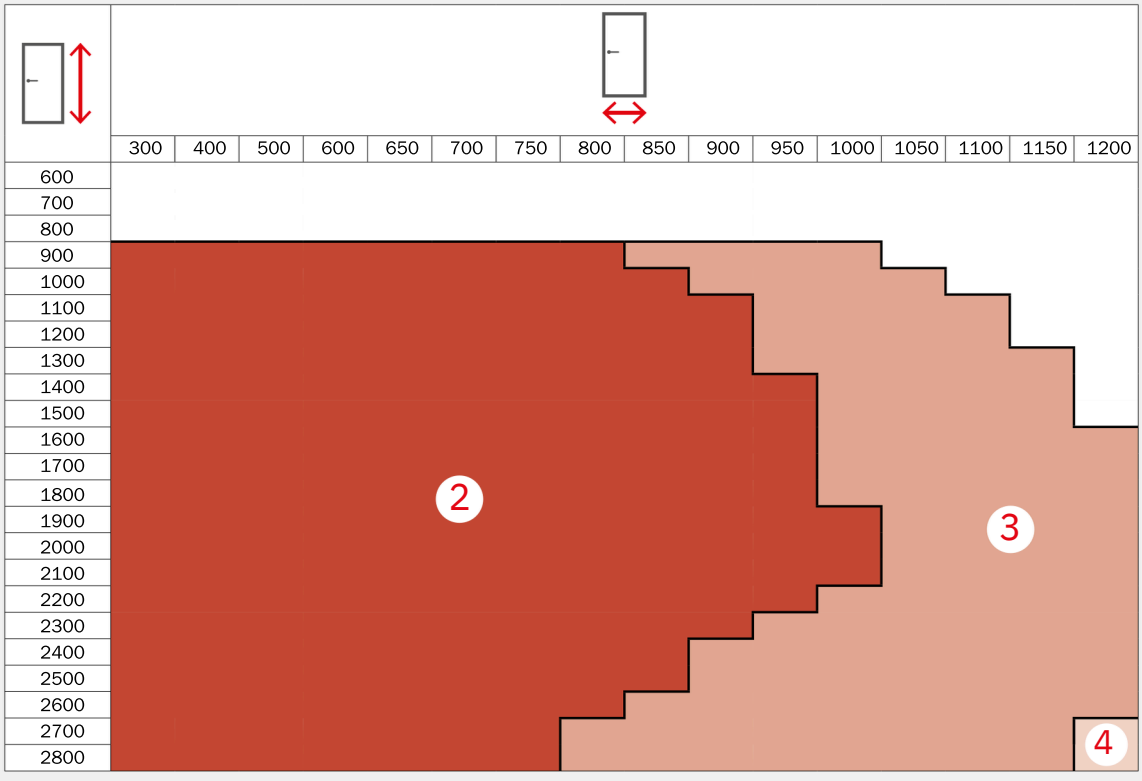

* The technical sheets are available at www.agb.it.
Doors with specific gravity of 25 kg/m².